Talis M54
Single lever kitchen mixer 210, pull-out spray, 2jet
Finish: **Chrome** Article Number: **72800000**



Description

product features

- ComfortZone 210
- swivel range adjustable in 4 steps 60°, 110°, 150° or 360°
- laminar spray, shower spray
- lockable shower spray, spray returns through pressing spray diverter and spray returns automatically through handle closing
- quick connect hose
- connection dimension: DN15
- maximum flow rate at 3 bar: 8 l/min
- ceramic cartridge
- connection type: G ⅜ hose connections
- temperature limitation adjustable
- integrated non-return valve
- suitable for continuous flow water heaters
- extension length up to 50 cm
- tap hole with Ø 35 mm required

Technology

Quick Clean

Comfort Zone

Pull-out

Design awards

reddot winner 2020

DESIGN AWARD 2020

Certificates / Sustainability

THIRD-PARTY VERIFIED EPD Institut Bauen und Umwelt e.V.

Product image



Scale drawing

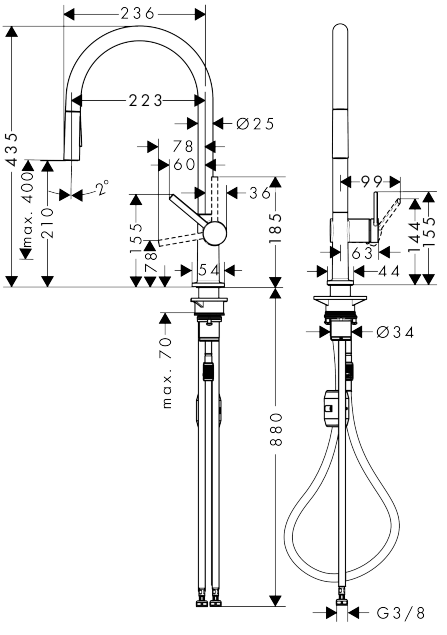

Talis M54
Single lever kitchen mixer 210, pull-out spray, 2jet
Finish: **Chrome** Article Number: **72800000**



Flowchart

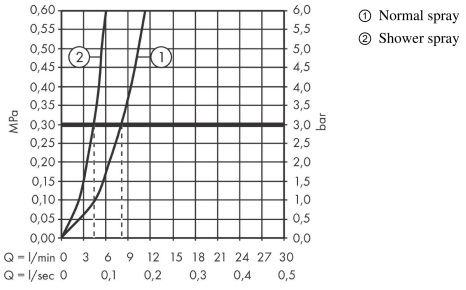

Talis M54
Single lever kitchen mixer 210, pull-out spray, 2jet
Finish: **Chrome** Article Number: **72800000**

Exploded Drawing

Year of production: **>12/19**

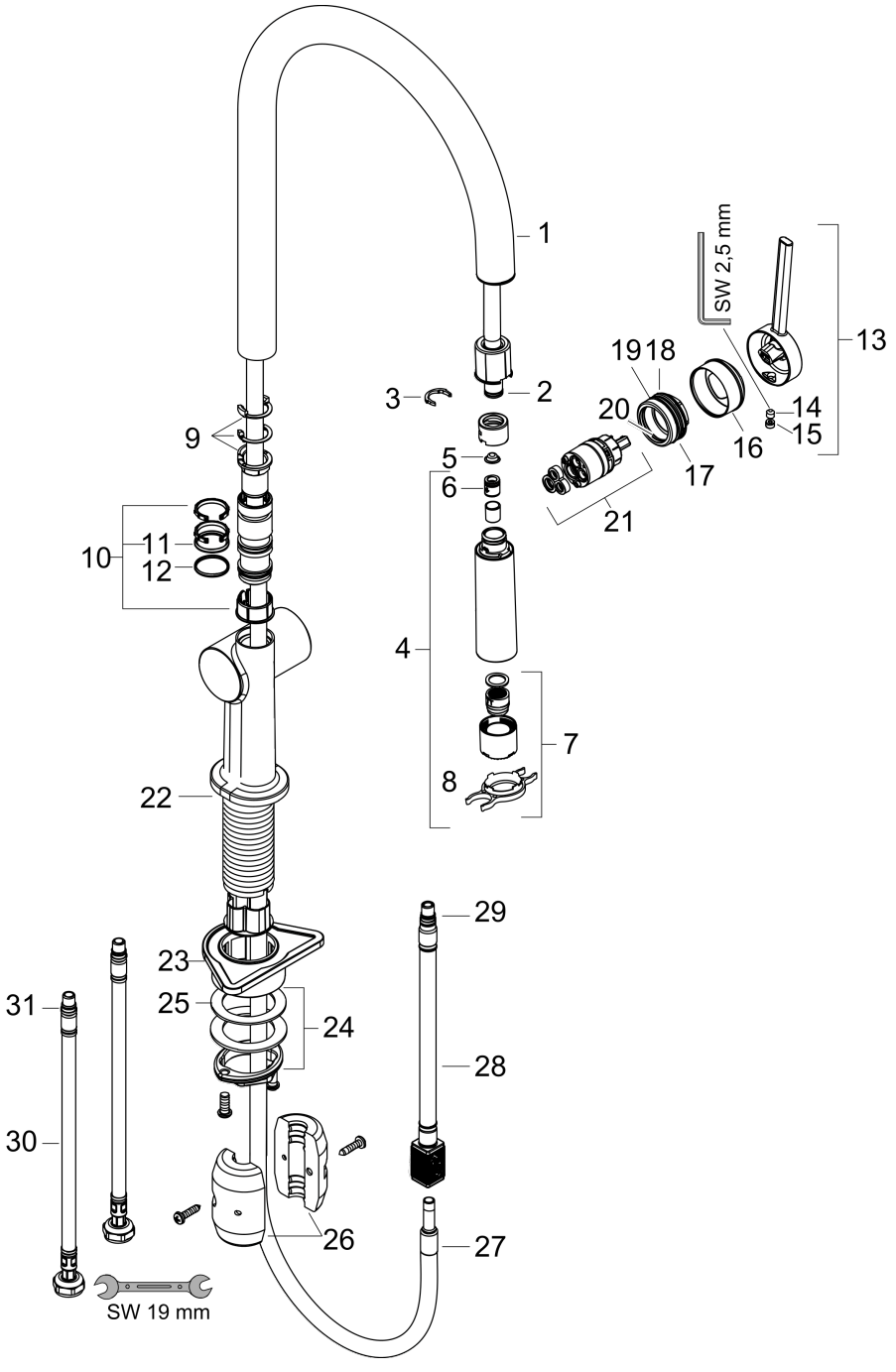

hansgrohe

Talis M54
Single lever kitchen mixer 210, pull-out spray, 2jet
Finish: **Chrome** Article Number: **72800000**



Spare part list

Year of production: **>12/19**

Pos.	Description	Article Number	PC	PU
1	spout cpl.	93739000	12	1
2	O-ring 8x2	98112000	1	1
3	cramp	87684000	1	1
4	handspray	93741000	12	1
5	filter	98516000	2	1
6	non return valve DW 10	96456000	3	1
7	spray former	93342000	10	1
8	service tool	95910000	3	1
9	set of locating rings (60° / 110° / 150°)	94911000	5	1
10	set of lever collars	98365000	3	1
11	O-ring 19x2	98426000	1	1
12	O-ring 20x1,5	98197000	1	1
13	handle	93736000	9	1
14	hollow set screw M5x5	98446000	1	1
15	screw cover	93735610	3	1
16	flange	93737000	9	1
17	nut	93738000	10	1
18	O-ring 30x1,5	98433000	1	1
19	O-ring 29x2	98391000	1	1
20	O-ring 25x1,5	98146000	2	1
21	cartridge, assy	93740000	13	1
22	O-ring 36x3	98052000	1	1
23	support	97523000	2	1
24	fixing set (Ø 34)	95049000	5	1
25	lever collar	97548000	1	1
26	weight	92500000	9	1
27	hose	93745000	12	1
28	hose	93744000	10	1
29	O-ring 7x1,5	98422000	1	1
30	connection hose 900 mm M8x0,75 G3/8	93746000	9	1
31	O-ring 6,6x1,6	93019000	1	1
a	set of adapters	93395000	7	1